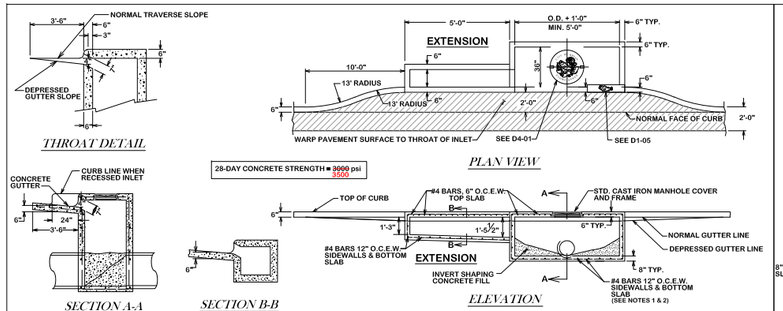

SINGLE RECESSED CURB INLET & CURB INLET W/EXTENSION

D1-00

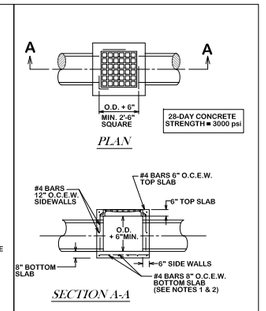

SINGLE GRATE INLET

D1-01

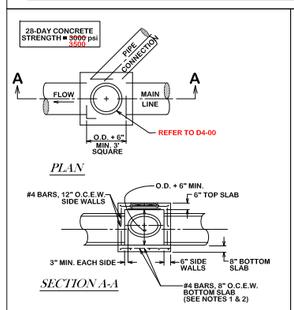

STORM SEWER JUNCTION BOX

D1-02

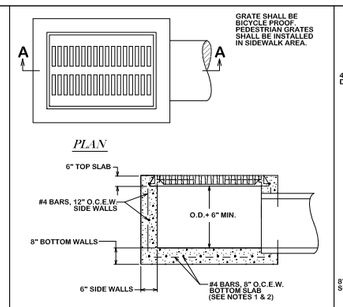

GRATE INLET

D1-03

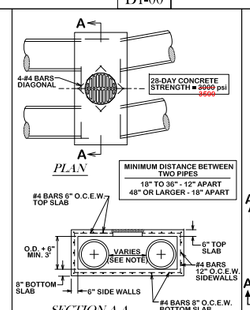

DOUBLE BARREL INLET

D1-04

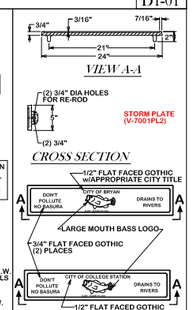

BASS LOGO PLATE

D1-05

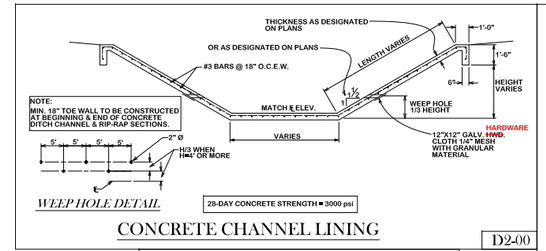

CONCRETE CHANNEL LINING

D2-00

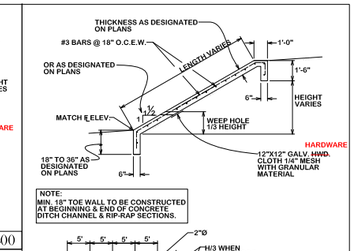

CONCRETE RIP-RAP

D2-01

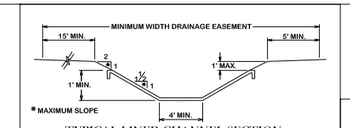

STANDARD CHANNEL SECTION

D2-02

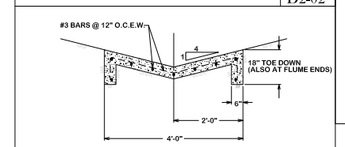

STANDARD FLUME SECTION

EXPANSION JOINTS AT 60' O.C.

D2-04

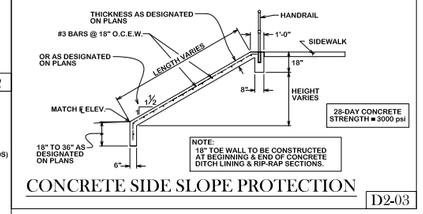

CONCRETE SIDE SLOPE PROTECTION

D2-03

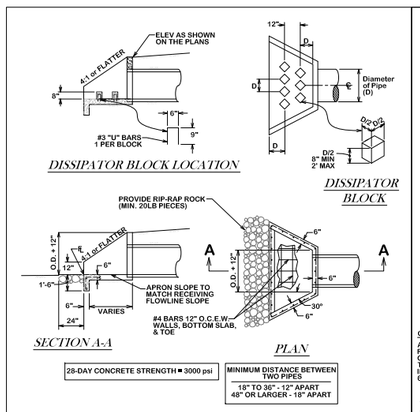

TYPICAL CONCRETE HEADWALL & END WALL WITH WINGS

D3-00

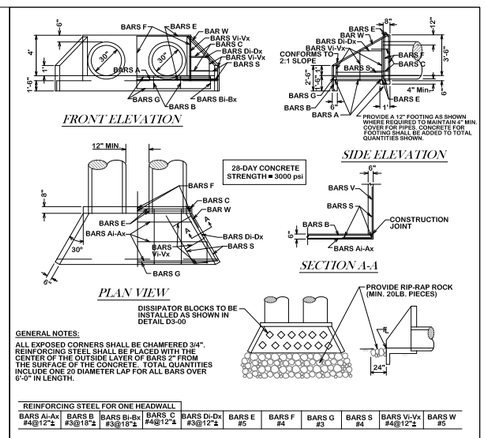

REINFORCING STEEL FOR ONE HEADWALL

BARS A-Ax	BARS B	BARS Bi-Bx	BARS C	BARS Di-Dx	BARS E	BARS F	BARS G	BARS S	BARS Vi-Vx	BARS W
#4@12"▲	#3@18"▲	#3@18"▲	#4@12"▲	#3@12"▲	#5	#4	#3	#4	#4@12"▲	#5

CONCRETE HEADWALL FOR 2 PIPES

D3-01

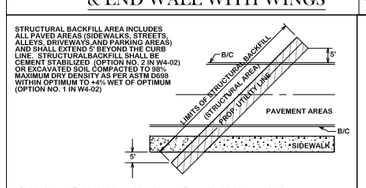

STRUCTURAL BACKFILL AREA

D3-02

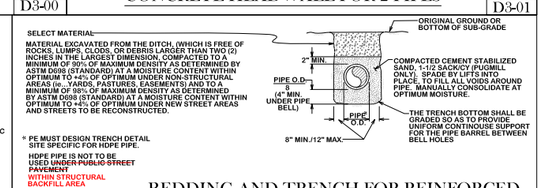

BEDDING AND TRENCH FOR REINFORCED CONCRETE PIPE AND BOX CULVERTS

D3-03

GENERAL NOTES:

1. BASE THICKNESS AND FOUNDATION SHALL BE AS FOLLOWS:

INLET DEPTH (FT.) (MEASURED FROM FLOWLINE TO FINAL GRADE)	BASE THICKNESS
0 - 12	8"
12 AND OVER	12"

2. DEPTHS GREATER THAN 12' WILL REQUIRE 2 MATS OF REINFORCING STEEL IN THE BASE.
3. ALL AREAS WHERE EXISTING VEGETATION AND GRASS COVER HAVE BEEN BARED BY CONSTRUCTION SHALL BE ADEQUATELY BLOCK SODDED OR HYDROMULCHED AND WATERED UNTIL GROWTH IS ESTABLISHED. IN DEVELOPED AREAS WHERE GRASS IS PRESENT, BLOCK SOD WILL BE REQUIRED.
4. APPROVED EROSION CONTROL MEASURES MUST BE INSTALLED DURING THE ENTIRE TIME THAT EARTH HAS BEEN BARED BY CONSTRUCTION AND SHALL STAY IN PLACE UNTIL ACCEPTABLE VEGETATIVE GROWTH IS ESTABLISHED AFTER CONSTRUCTION IS COMPLETE AND THEN REMOVED BY CONTRACTOR.

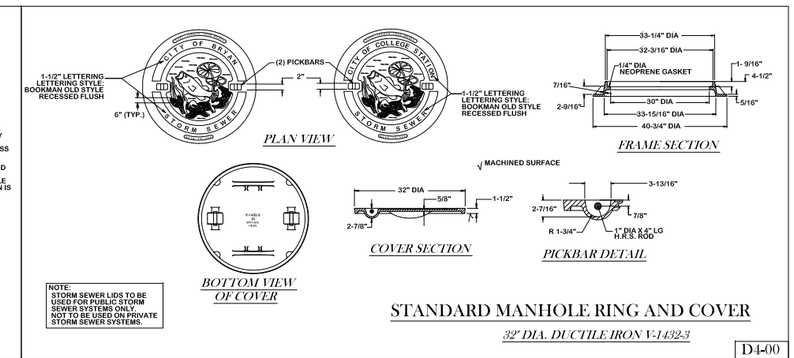

STANDARD MANHOLE RING AND COVER

32" DIA. DUCTILE IRON V-1432-3

D4-00

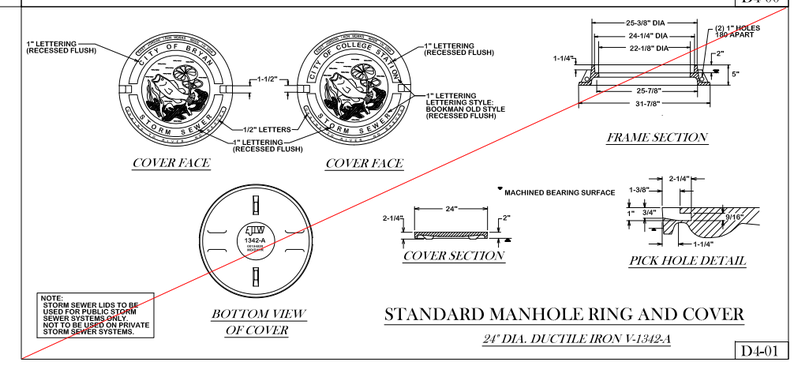

STANDARD MANHOLE RING AND COVER

24" DIA. DUCTILE IRON V-1342-A

D4-01

REVISIONS:

BRYAN - COLLEGE STATION STANDARD DRAINAGE DETAILS

CITY OF COLLEGE STATION

CITY OF BRYAN
The Good Life, Texas Style.

DRAWN BY:	B.L.
DATE:	02-24-21
SCALE:	N.T.S.
APPROVED:	W. P. K.

FIGURE:

D

SHEET 1 OF 1